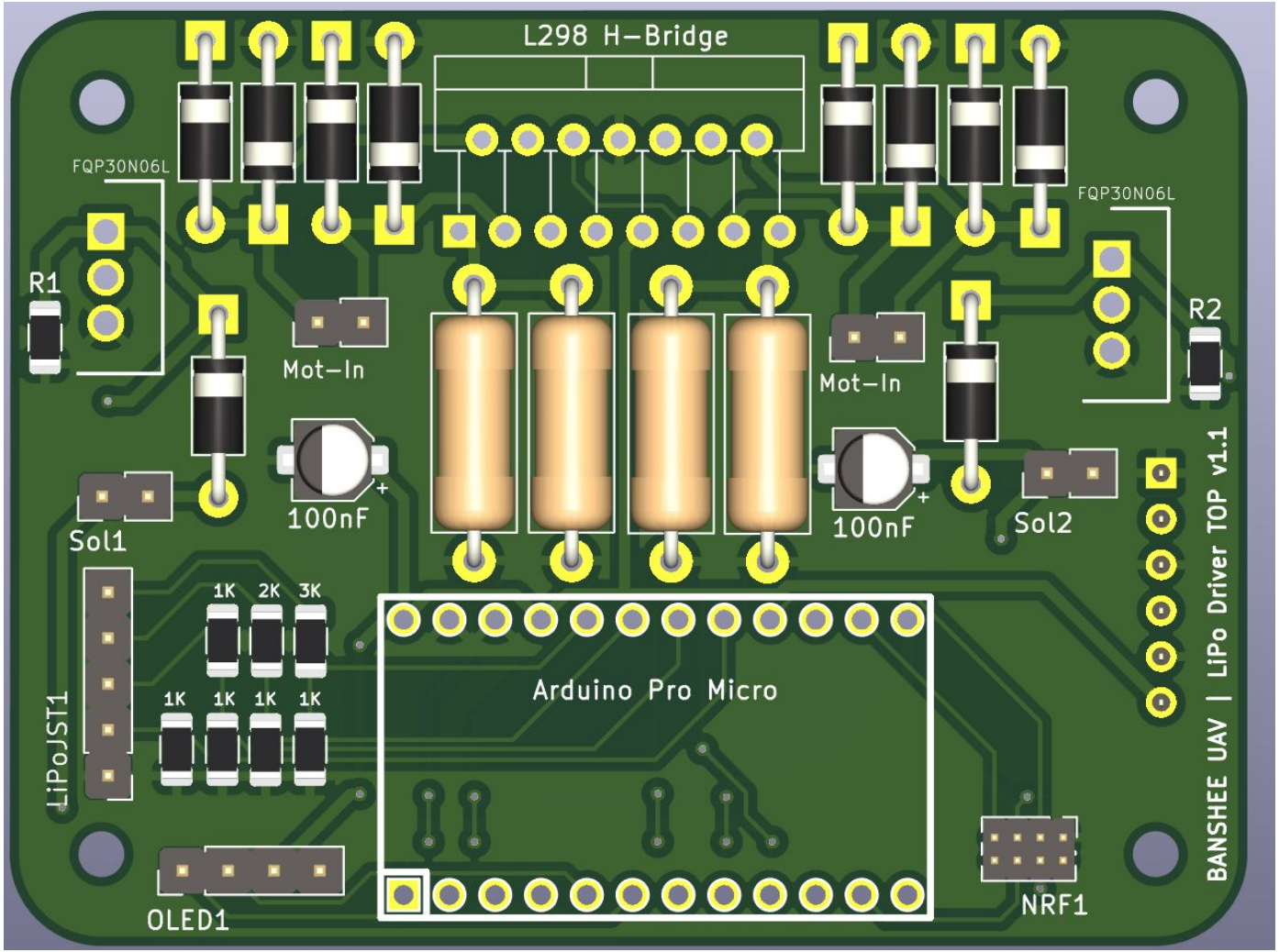
L298 H-Bridge
FQP30N06L
FQP30N06L
R1
R2
Mot-In
Mot-In
100nF
100nF
Sol1
Sol2
1K 2K 3K
1K 1K 1K 1K
LiPoJST1
Arduino Pro Micro
OLED1
NRF1
BANSHEE UAV | LiPo Driver TOP v1.1

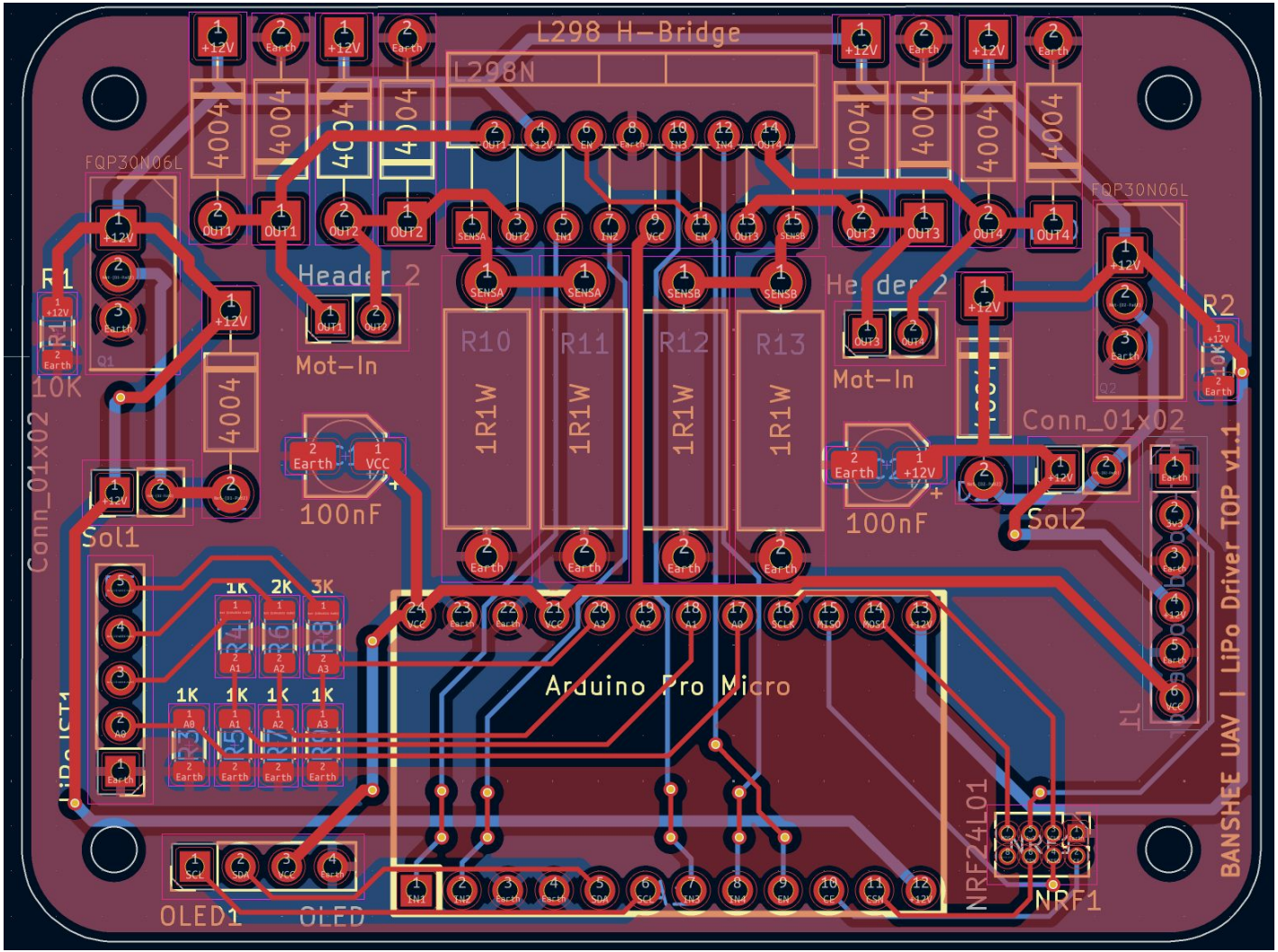
L298 H-Bridge
L298N
FQP30N06L
Header 2
Mot-In
R1
10K
R2
10K
Conn_01x02
Sol1
Sol2
100nF
R10
R11
R12
R13
1R1W
1K
2K
3K
Arduino Pro Micro
OLED1
OLED
NRF24L01
NRF1
BANSHEE UAV | LiPo Driver TOP v1.1

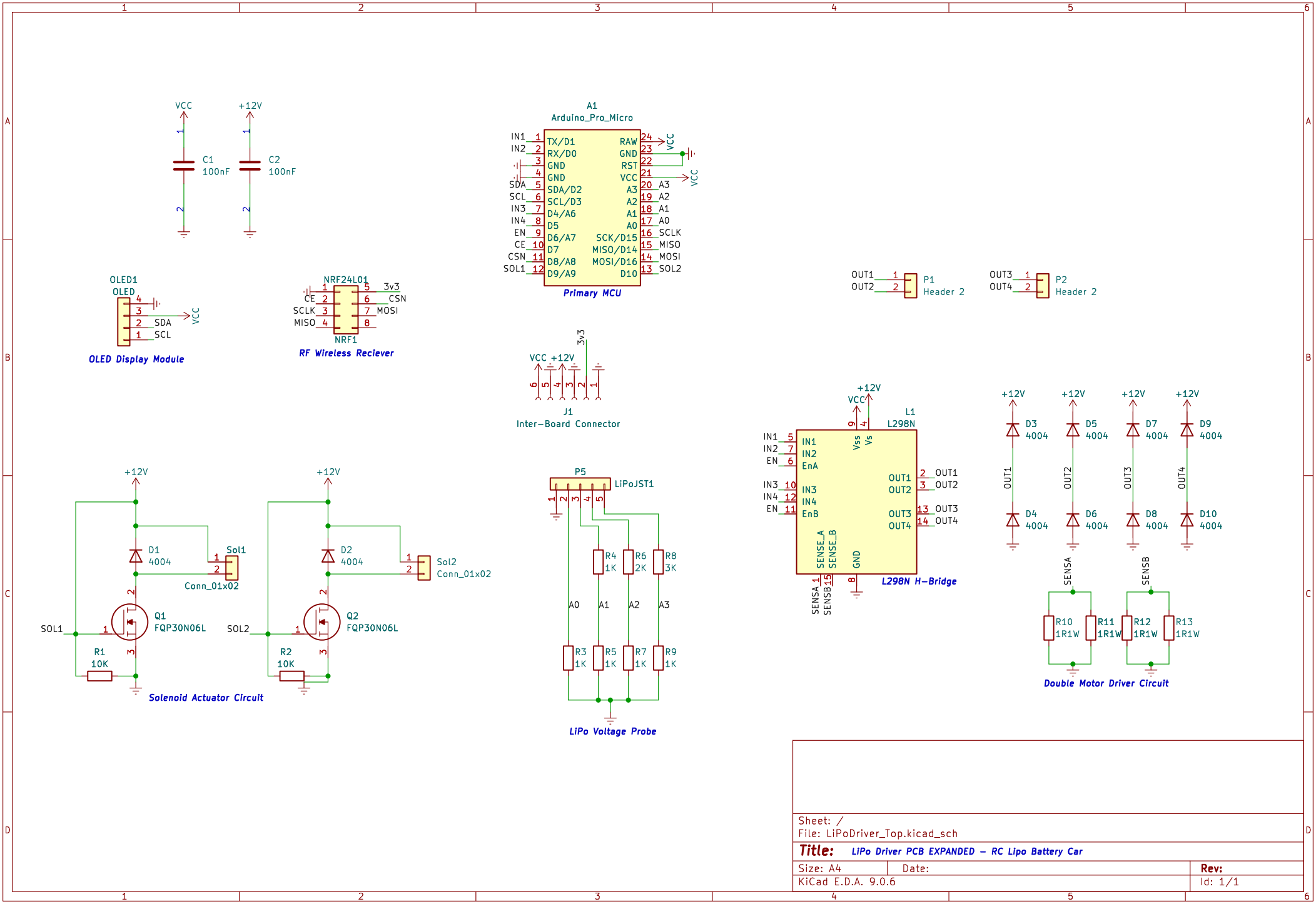

Sheet: /
File: LiPoDriver_Top.kicad_sch

Title: *LiPo Driver PCB EXPANDED – RC Lipo Battery Car*

Size: A4	Date:	Rev:
KiCad E.D.A. 9.0.6		Id: 1/1

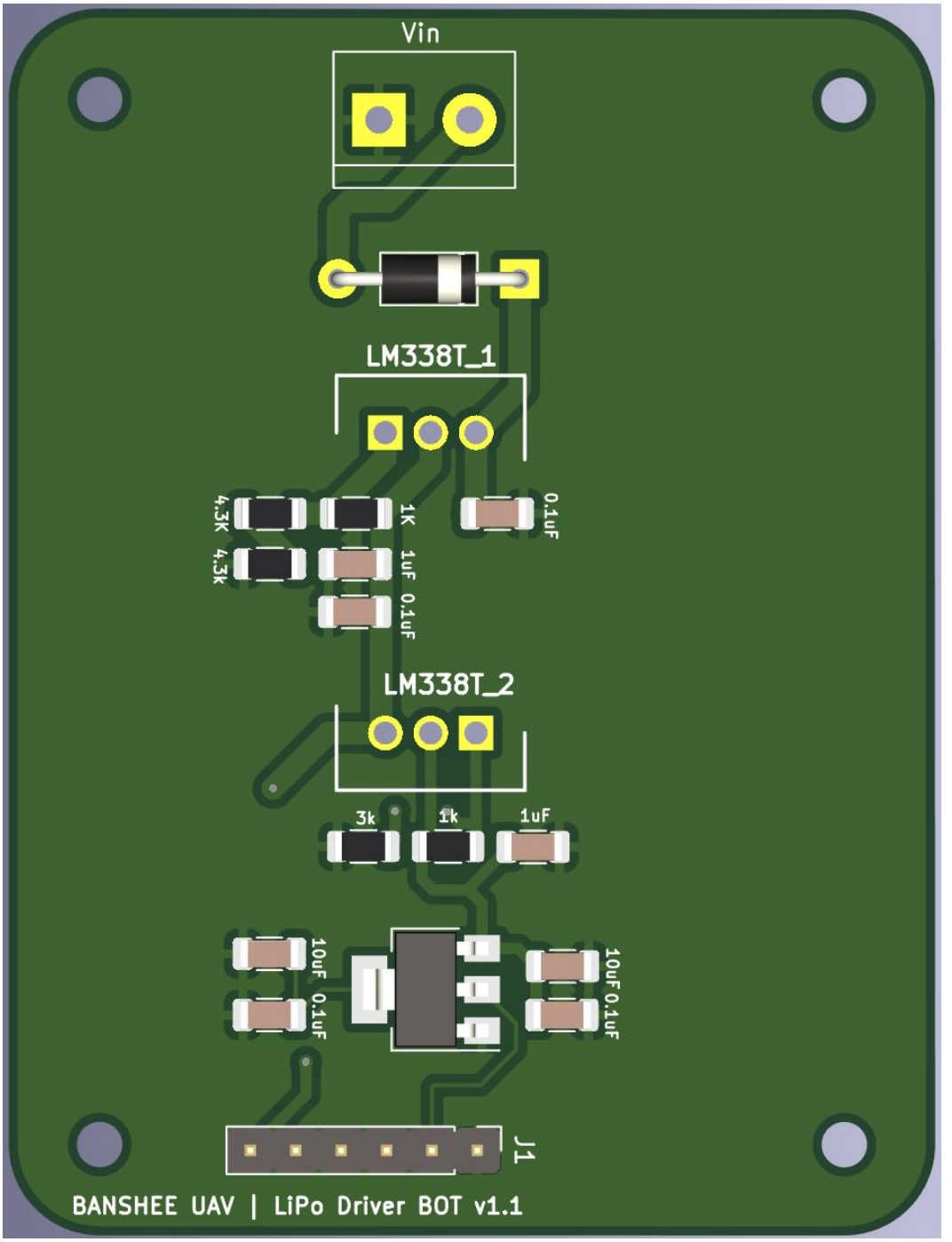
Vin
LM338T_1
4.3K
4.3k
1K
1uF
0.1uF
0.1uF
LM338T_2
3k
1k
1uF
10uF
0.1uF
10uF
0.1uF
J1
BANSHEE UAV | LiPo Driver BOT v1.1

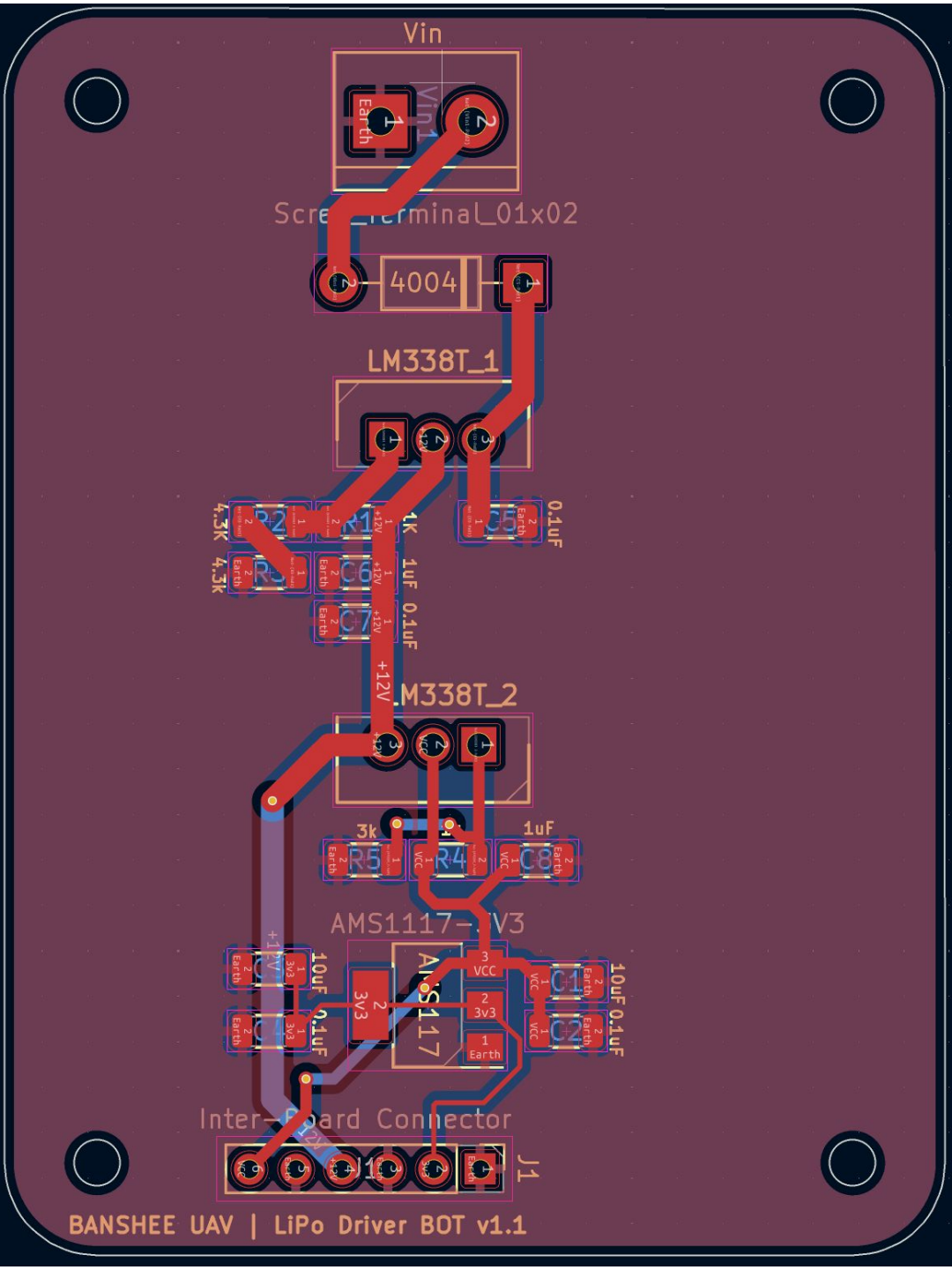
Vin
Vin1
Earth
Screw_Terminal_01x02
4004
LM338T_1
R2
R1
C5
4.3K
4.3K
1K
0.1uF
R3
C6
C7
1uF
0.1uF
+12V
LM338T_2
3k
1
R5
R4
C8
1uF
AMS1117-3V3
AMS117
VCC
3v3
Earth
C1
C2
10uF
0.1uF
Inter-Board Connector
J1
BANSHEE UAV | LiPo Driver BOT v1.1

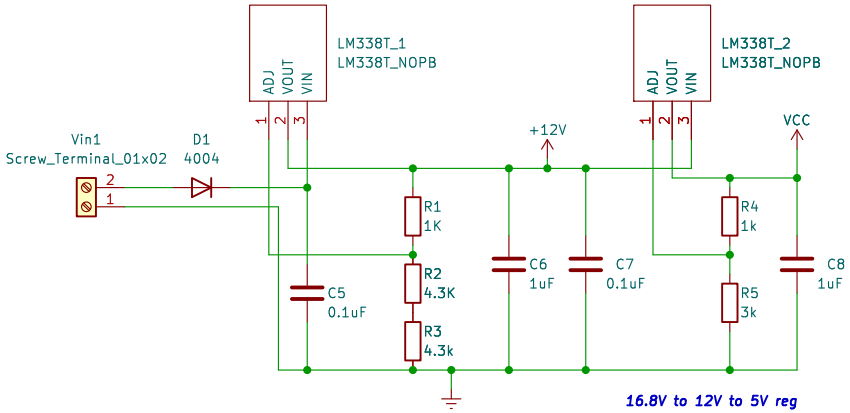

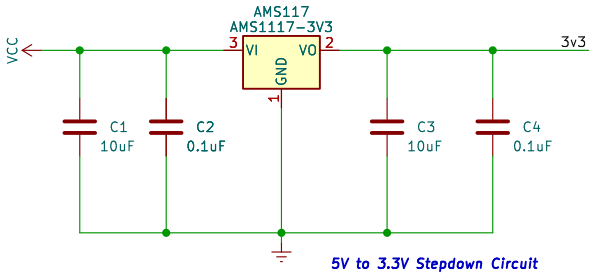

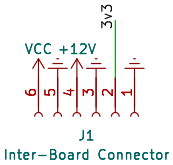

Sheet: /
File: LiPoDriver_Bottom.kicad_sch

Title:

Size: A4	Date:	Rev:
KiCad E.D.A. 9.0.6		Id: 1/1

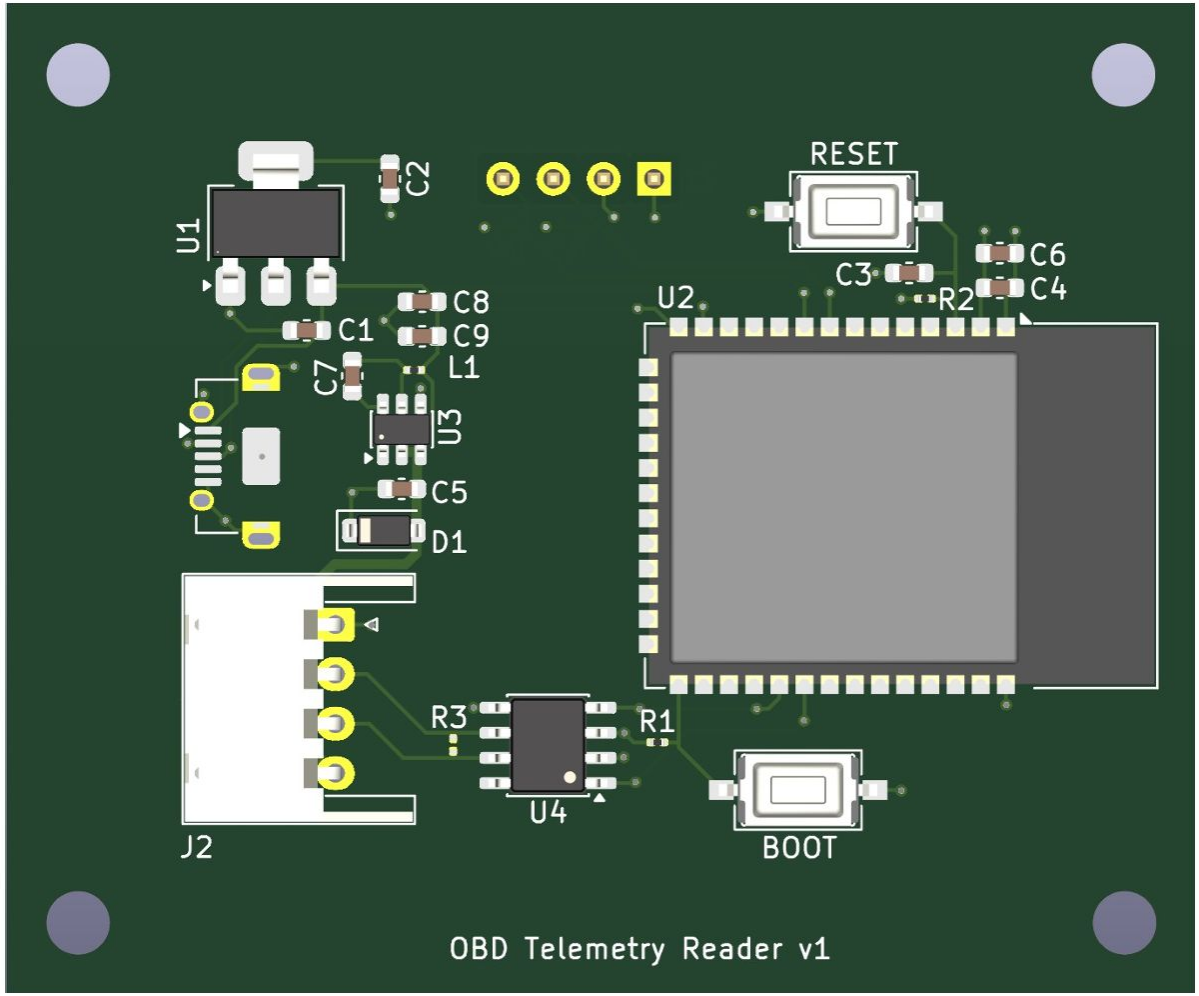
RESET
C2
U1
C6
C3
C4
R2
U2
C8
C1
C9
L1
C7
U3
C5
D1
R3
R1
U4
J2
BOOT
OBD Telemetry Reader v1

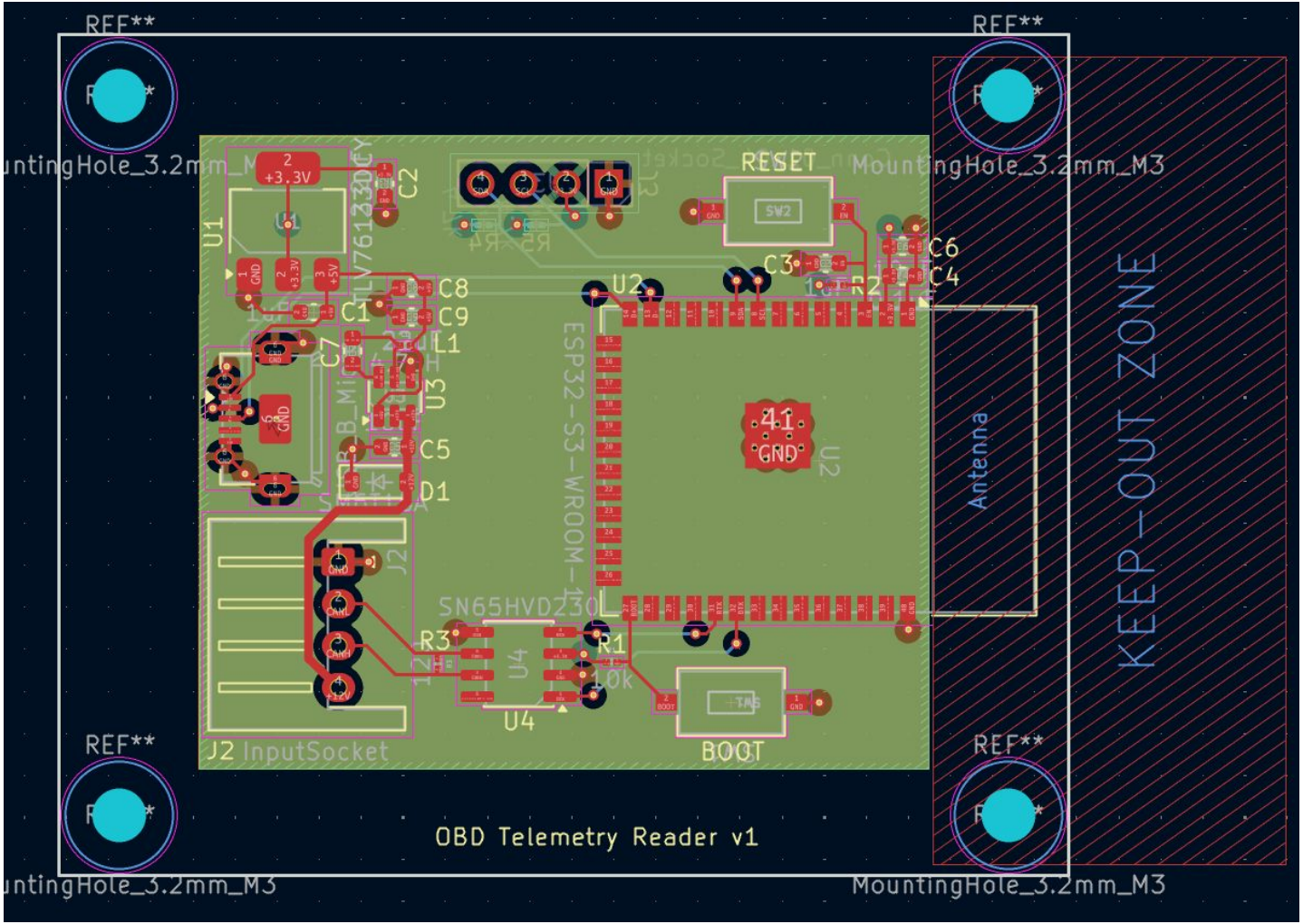
REF**
REF**
MountingHole_3.2mm_M3
RESET
SW2
C6
C4
C3
R2
U2
C2
U1
TLV76133DCY
C8
C9
C1
L1
C7
U3
C5
D1
ESP32-S3-WROOM-1
41
GND
Antenna
KEEP_OUT ZONE
J2
SN65HVD230
R3
R1
10k
U4
BOOT
J2 InputSocket
REF**
REF**
OBD Telemetry Reader v1
MountingHole_3.2mm_M3
MountingHole_3.2mm_M3

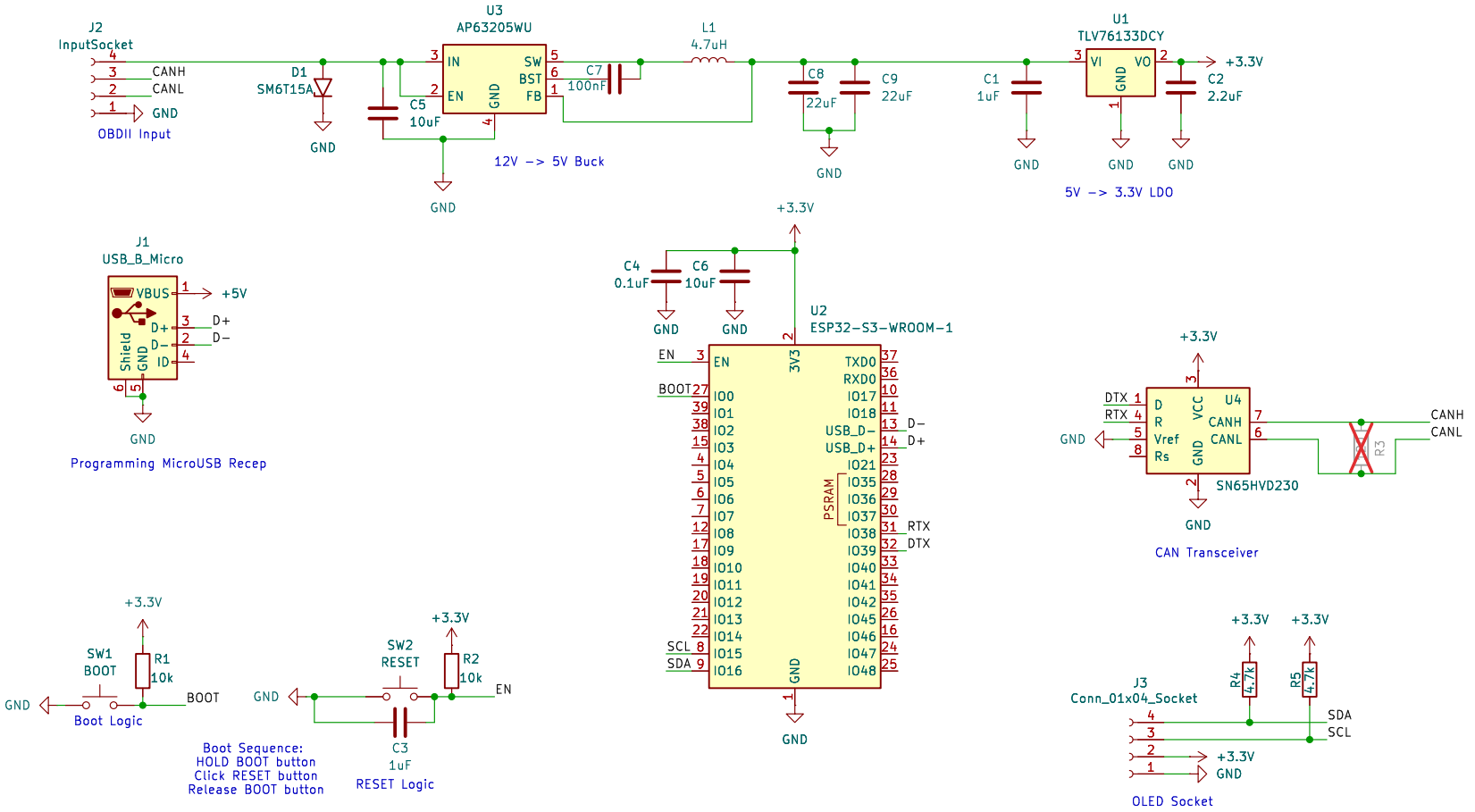

Sheet: /
File: OBDTelemetryPCB.kicad_sch

Title:

Size: A4	Date:	Rev:
KiCad E.D.A. 9.0.6		Id: 1/1